Evaluation Report

"2.67" x 0.875" Corrugated" Wall Panel

Wall Panel Assembly

Manufacturer

Englert, Inc.

1200 Amboy Avenue
Perth Amboy, NJ 08862
(732) 826-8614

for

Florida Product Approval

FL 17209.5 R7

Florida Building Code 9th Edition (2026)

Method: 2 - B
Category: Structural Components
Sub - Category: Structural Wall

Prepared by:
James L. Buckner, P.E., S.E.C.B.
Florida Professional Engineer # 31242
Florida Evaluation ANE ID: 1916
Project Manager: Diana Galloway
Report No. 26-805-2.67x875-ER
(Revises Report No. 23-555-2.67x875-ER, FL17209.5 R6)
Date: 08/12/2026

This item has been digitally signed and sealed by James L. Buckner, P.E., on this date below. Printed copies of this document are not considered signed and sealed, and the signature must be verified on any electronic copies.

JAMES L. BUCKNER
LICENSE
No 31242
STATE OF FLORIDA
PROFESSIONAL ENGINEER

James L. Buckner, P.E.
FL31242

2026.08.12 14:13:24 -04'00'

Contents:

Evaluation Report Pages 1 – 6

Manufacturer:
Englert, Inc.
1200 Amboy Avenue
Perth Amboy, NJ 08862
(732) 826-8614
http://www.englertinc.com/

Product Name: **"**2.67" x 0.875" Corrugated**"** Wall Panel

Product Category: Structural Components

Product Sub-Category Structural Wall

Compliance Method: State Product Approval Rule 61G20-3.005 (2) (b)

Product/System Description: "2.67" x 0.875" Corrugated" panels are 7/8" deep, 2.67" wide rib corrugated wall panels attached to steel supports with screws. Panels may be installed horizontally or vertically to steel supports.

Product Assembly as Evaluated: Refer to Page 4 of this report for product assembly components/materials & standards:

1. Wall Panel
2. Fasteners

Support:

Type:
Steel Supports
(Design of support and its attachment to support framing is outside the scope of this evaluation.)

Description:
Steel Supports
Thickness: 20 Gauge minimum (0.034")
Yield Strength: 50 ksi minimum
Size: 3" wide x 1-1/2" high
Steel Support Spacing: 48"

Performance:
Wind Resistance:
Design Pressure: **Refer to Table "A"**
(Refer to "Table A" attachment details herein)

Performance Standards: The product described herein has demonstrated compliance with:

- ASTM E330 – Standard Test Method for Structural Performance of Exterior Windows, Doors, Skylights and Curtain Walls by Uniform Static Air Pressure Difference

Code Compliance: The product(s) described herein have demonstrated compliance with the performance standards listed above and complies with:
Florida Building Code 9th Edition (2026), Section 1708.2

Evaluation Report Scope: This product evaluation is limited to compliance with the structural requirements of the Florida Building Code, as related to the scope section to Florida Product Approval Rule 61G20-3.001.

Limitations and Conditions of Use:

- Diaphragm and axial load capacity is outside the scope of this evaluation.

<u>Scope of "Limitations and Conditions of Use" for this evaluation:</u>
This evaluation report for "Optional Statewide Approval" contains technical documentation, specifications and installation method(s) which include "Limitations and Conditions of Use" throughout the report in accordance with Rule 61G20-3.005. Per Rule 61G20-3.004, the Florida Building Commission is the authority to approve products under "Optional Statewide Approval".

- This report is a building code product evaluation per FLPE rule (FAC) 61G15-36 to comply with Florida product approval rule (FAC) 61G20-3. This evaluation report is part of the Florida Building Commission approval for the listed code related criteria. This report by James Buckner, P.E. and CBUCK Engineering is not a design certification of code compliance construction submittal documentation, per FBC section 107, for any individual structure, site specific or permit design.
- Design of support system is outside the scope of this report. Support shall be designed by others and shall comply with the FBC Chapters 22 for steel and Chapter 16 for structural loading.
- All metal components and fasteners shall be corrosion resistant in accordance with applicable sections of FBC. Installations located within 3000 feet of a saltwater coastline shall comply with Section 1711.
- Fire Classification is outside the scope of Rule 61G20-3 and is therefore not included in this evaluation.
- This evaluation report does not evaluate the use of this product for use in the High Velocity Hurricane Zone code section. (Dade & Broward Counties)

<u>Option for application outside "Limitations and Conditions of Use"</u>
Rule 61G20-3.005(1)(e) allows engineering analysis for "project specific approval by the local authorities having jurisdiction in accordance with the alternate methods and materials authorized in the Code". Any modification of the product as evaluated in this report and approved by the Florida Building Commission is outside the scope of this evaluation and will be the responsibility of others.

Quality Assurance: The manufacturer has demonstrated compliance of wall panel products in accordance with the Florida Building Code and Rule 61G20-3.0005 (3) for manufacturing under a quality assurance program audited by an approved quality assurance entity through Keystone Certifications, Inc. (FBC Organization ID# QUA 1824).

Components/Materials (by Manufacturer):	**Wall Panel:**	"2.67" x 0.875" Corrugated"
	Material:	Steel or Aluminum
	Thickness:	Refer to Table A
	Panel Width:	32" (max.) Coverage
	Rib Height:	7/8"
	Steel Yield Strength:	40 ksi min.
	Alum Alloy Type:	3105-H24, in compliance with ASTM B 209
	Corrosion Resistance:	Kynar 500 paint finish (In compliance with FBC Section 1405.2)
	Fasteners:	
	FASTENER 1:	Panel to Support
	Type:	Hex-Head Self-Tapping Screw with WSW
	Size :	**#12** – 14 x 1-1/2"
	Corrosion Resistance:	Per FBC Section 1405.17 & 1403.12
	Standard:	SAE J78-1979
	FASTENER 2:	Panel to Panel, Stitch Lap
	Type:	Hex-Head Self-Tapping Screw with WSW
	Size :	**1/4"** - 14 x 7/8"
	Corrosion Resistance:	Per FBC Section 1405.17 & 1403.12
	Standard:	SAE J78-1979
	Tape:	
	Type:	Non-curing Butyl Tape
	Size:	1/2" (Wide)
	Location:	All panel vertical lap joints
	Sealant:	
	Type:	Gunable Non-curing Butyl Sealant
	Size:	1/2" wide bead
	Location:	All panel horizontal lap joints between panels

Installation:

Installation Method:
(Refer to **"TABLE A"** below and drawings at the end of this report.)

- Support Spacing: **Refer to "TABLE A" Below**
- Fastener spacing**: 8" o.c.**
  (along the support, in the valley of every third corrugation)
- Sidelap spacing: **16" o.c.**
  (along the length of the side laps, at all vertical lap joints)
- Minimum fastener penetration thru bottom of support, 3/4".
  (through flange of steel supports)

TABLE A
ENGLERT "2.67" x 0.875" Corrugated" WALL PANEL
ALLOWABLE LOADS

#	MAT'L	THICKNESS	MAX. SUPPORT SPACING	SPAN CONDITION	FASTENER SPACING	SIDELAP SPACING	DESIGN PRESSURE (PSF)
1.	ALUM	0.032"	48" (4'- 0")	DOUBLE	8" o.c.	16" o.c.	+ 33.3 - 46.6
2.	STEEL	24 ga.	48" (4'- 0")	DOUBLE	8" o.c.	16" o.c.	+ 50 - 70

NOTES:

- Negative Pressure Outward/Positive Pressure Inward
- Allowable design pressure(s) for allowable stress design (ASD).
- Fastener Attachment to Steel Supports May Be Designed By A Qualified Design Professional As Required By The Florida Building Code For Site Specific Projects.
- Diaphragm and axial load capacity are not included in this evaluation
- Panels may be installed horizontally or vertically.

Install the "2.67" x 0.875" Corrugated" wall panel assembly in compliance with the installation method listed in this report and applicable code sections of FBC 9th Edition (2026). The installation method described herein is in accordance with the scope of this evaluation report. Refer to manufacturer's installation instructions as a supplemental guide for attachment.

Evaluation Reference Data:

1. ASTM E330-02 Test Report
   By Architectural Testing, Inc.(FBC Organization ID# TST 1558)
   Report #D0864.04-109-44, Date: 4/7/14
2. Quality Assurance
   Keystone Certifications, Inc. (FBC Organization ID# QUA 1824)
   Englert, Inc. Licensee #420
3. Certification of Independence
   By James L. Buckner, P.E. @ CBUCK Engineering
   (FBC Organization # ANE 1916)

Additional Standards Tests:

(Performed but not evaluated in this report.)

1. ASTM E331-00 Water Penetration Test & ASTM E283-04 Air Leakage Test
   By Architectural Testing, Inc. (FBC Organization ID# TST 1558)
   Report # D0864.04-109-44, Date: 4/7/14

Installation Method
Englert, Inc.
"2.67" x 0.875" Corrugated" Wall Panel

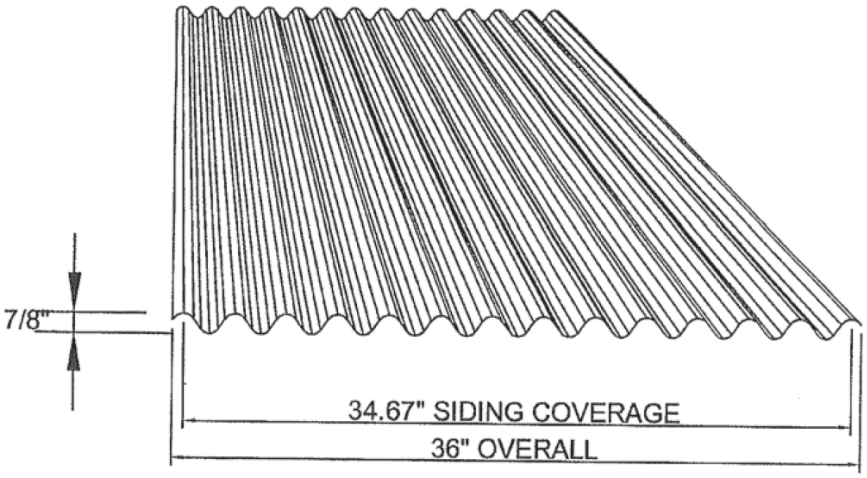

PROFILE VIEW

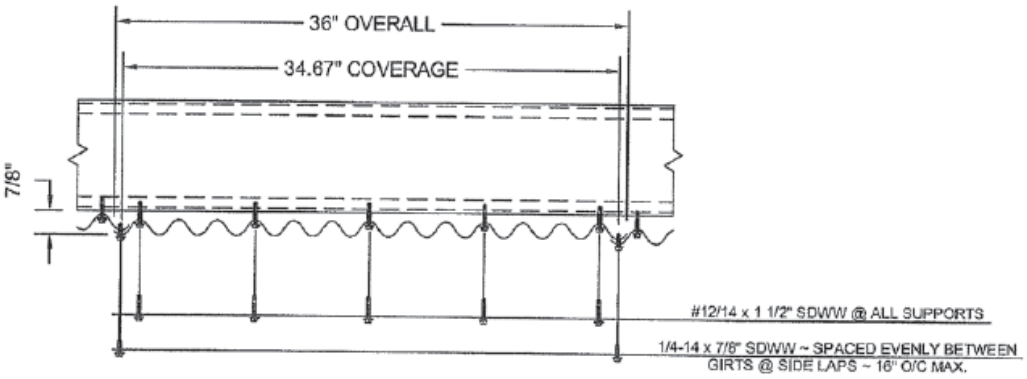

TYPICAL ASSEMBLY PROFILE VIEW
(TYPICAL FASTENING PATTERN ALONG SUPPORTS)

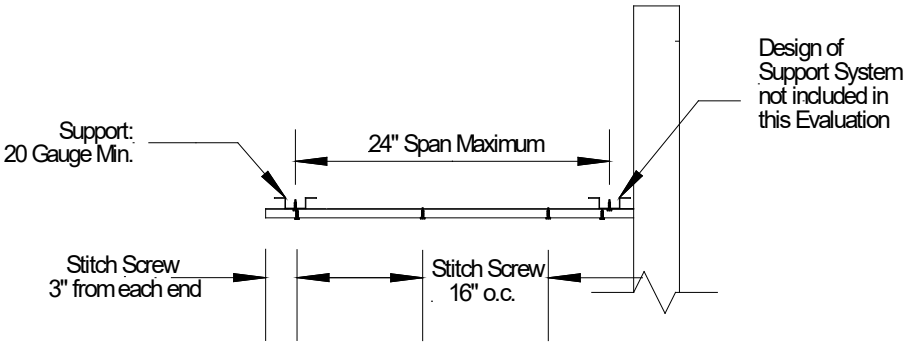

TYPICAL ASSEMBLY SECTION VIEW